All information on the drawing is the property of Formani Holland B.V. and may not be copied, in any way whatsoever without obtaining the permission in writing from Formani Holland B.V

LSQ5-DK

non-locking tilt and turn
window handle
stainless steel

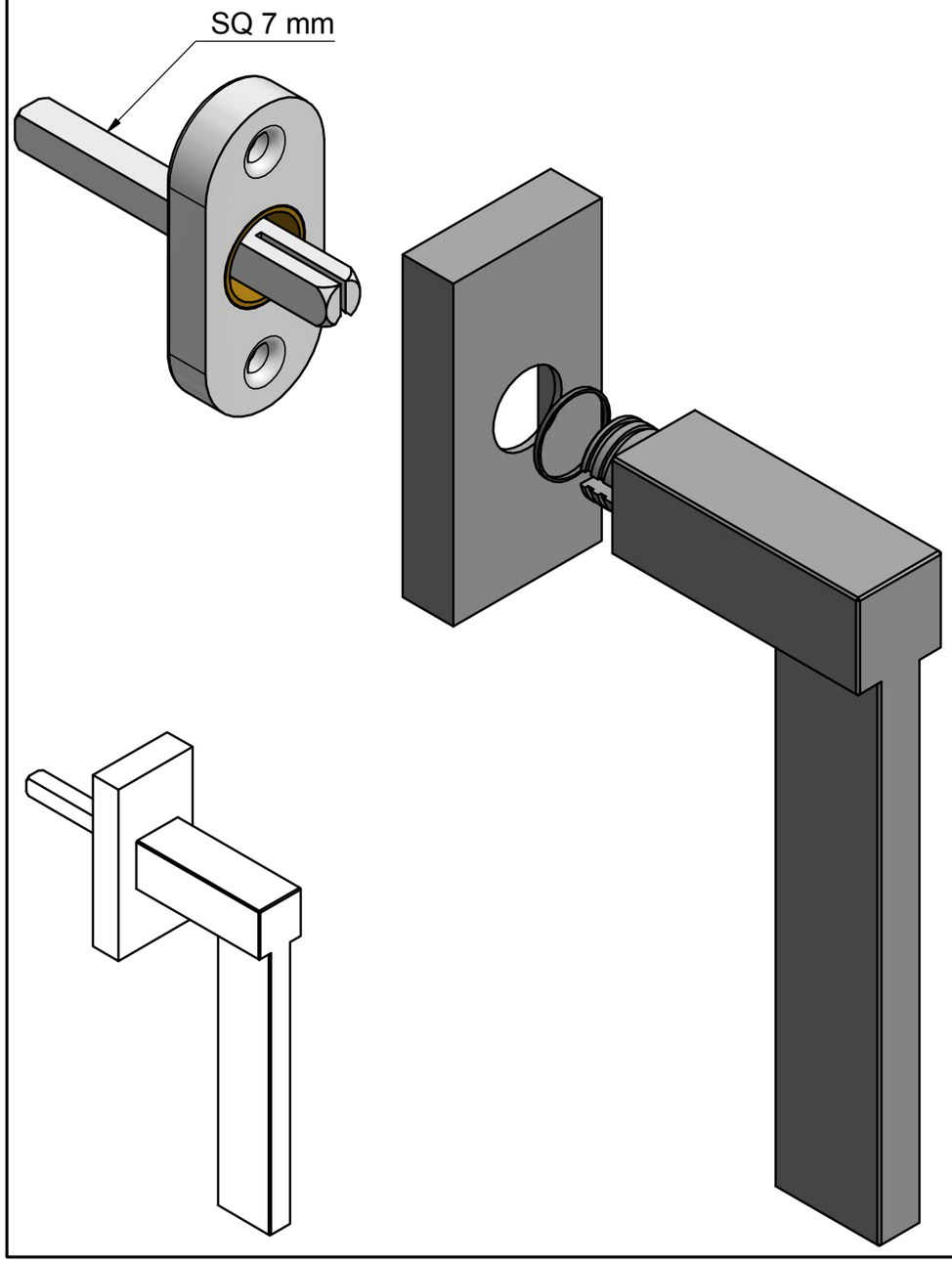

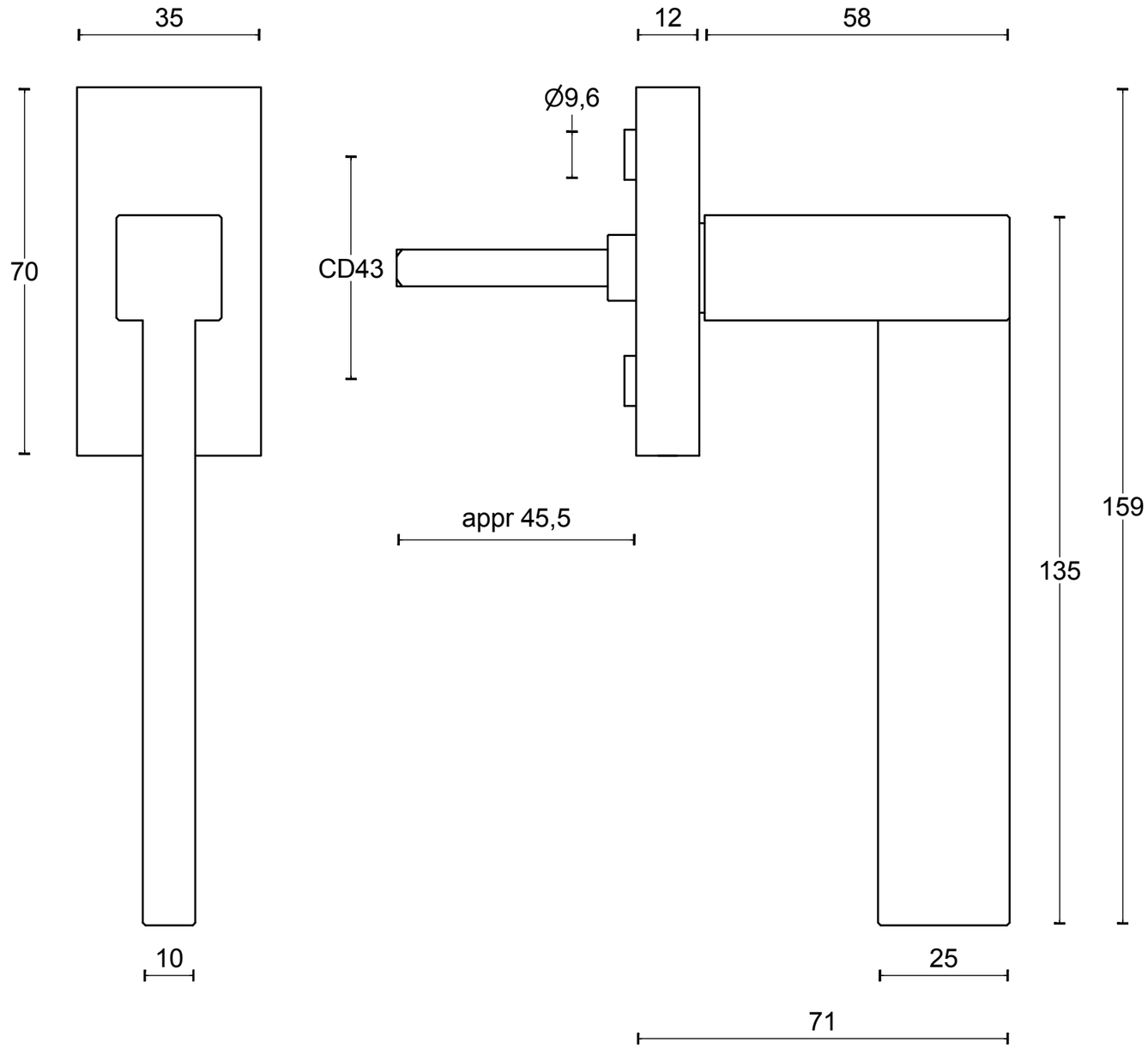

FORMANI®		Part number:	
Doc no.: 1503D054 LSQ5-DK V01.dwg		Description: LSQ5-DK	Format: A3
Drawn by: Christian Brimbois	Creation date: 1-9-2017		

FORMANI HOLLAND B.V. EUROPALAAN 12 6199 AB MAASTRICHT-AIRPORT NL T +31 (0)43 308 90 00 INFO@FORMANI.COM FORMANI.COM